FLEAS MULTIPLY, SO SCRATCH SHABAKH

Ever since the need for multiplication of two numbers became apparent, man has used some "device" to simplify his calculations. The method explained below has many names but the basic principle remains the same throughout. The Hindus called it (would you believe) SHABAKH, the Arabs a SIEVE, a gentleman rejoicing in the splendid name of ABOUL HASSAN ALI BEN MOHAMMED called it ALKACADI, the Italians used a slightly more sophisticated method called the GELOSIA FRAMEWORK (see previous issue Number 44), which was very similar to Napier's Bones, etc., etc. But whatever it is called, it has the advantage that it requires only the knowledge of all "tables" up to and including the 9-times table, and all complications like "put down a 0" because you're multiplying by 10, etc., solve themselves. (See Example 2 and see if you can see the reason why these problems are automatically solved by this method.)

As regards the method itself, perhaps the following example and explanation of the steps will clarify matters. Consider 324×4 as a simple case. The calculation is as follows:—

(1) Draw a rectangle whose size is determined by the number of figures in the sum; i.e., in this case 3 squares along by 1 square down.

(2) Draw in the diagonals of the squares and extend them below as shown.

(3) Write the figures of the sum above the squares and on the right and proceed as follows, taking each square in turn. $4 \times 4 = 16$; put the "10's digit" above the diagonal and the "units digit" below the diagonal.

$4 \times 2 = 8 = 08$ (to get two figures to fill the square) $4 \times 3 = 12$; 1 above the diagonal, 2 below the diagonal as before.

Then add down the diagonals, writing the answers in the space drawn below the rectangle. Hence, working from right to left—

Example 1.

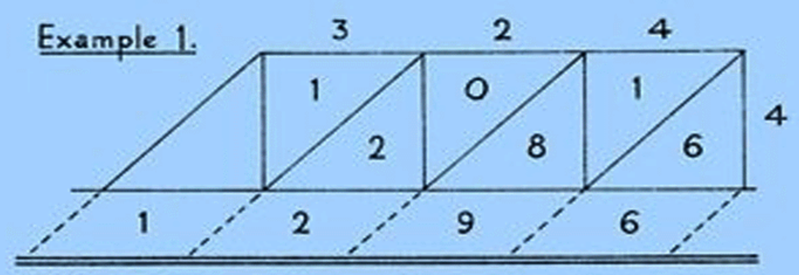

$6+0=6$
$1+8=9$
$0+2=2$
$1+\text{blank}=1$

Answer: 1296.

(Note that at each step I am multiplying the figure from the right-hand column by the figure from above the square.)

continued on page 643

Printed by Ratnett & Co. Ltd., Knighton Junction Lane, Leicester

join the mathematical pie in mathematical pie society mathematical pie

No. 81 *Editorial Address :* **West View, Fiveways, Nr. Warwick** **SUMMER, 1977**

IN PURSUIT OF PYTHAGORAS

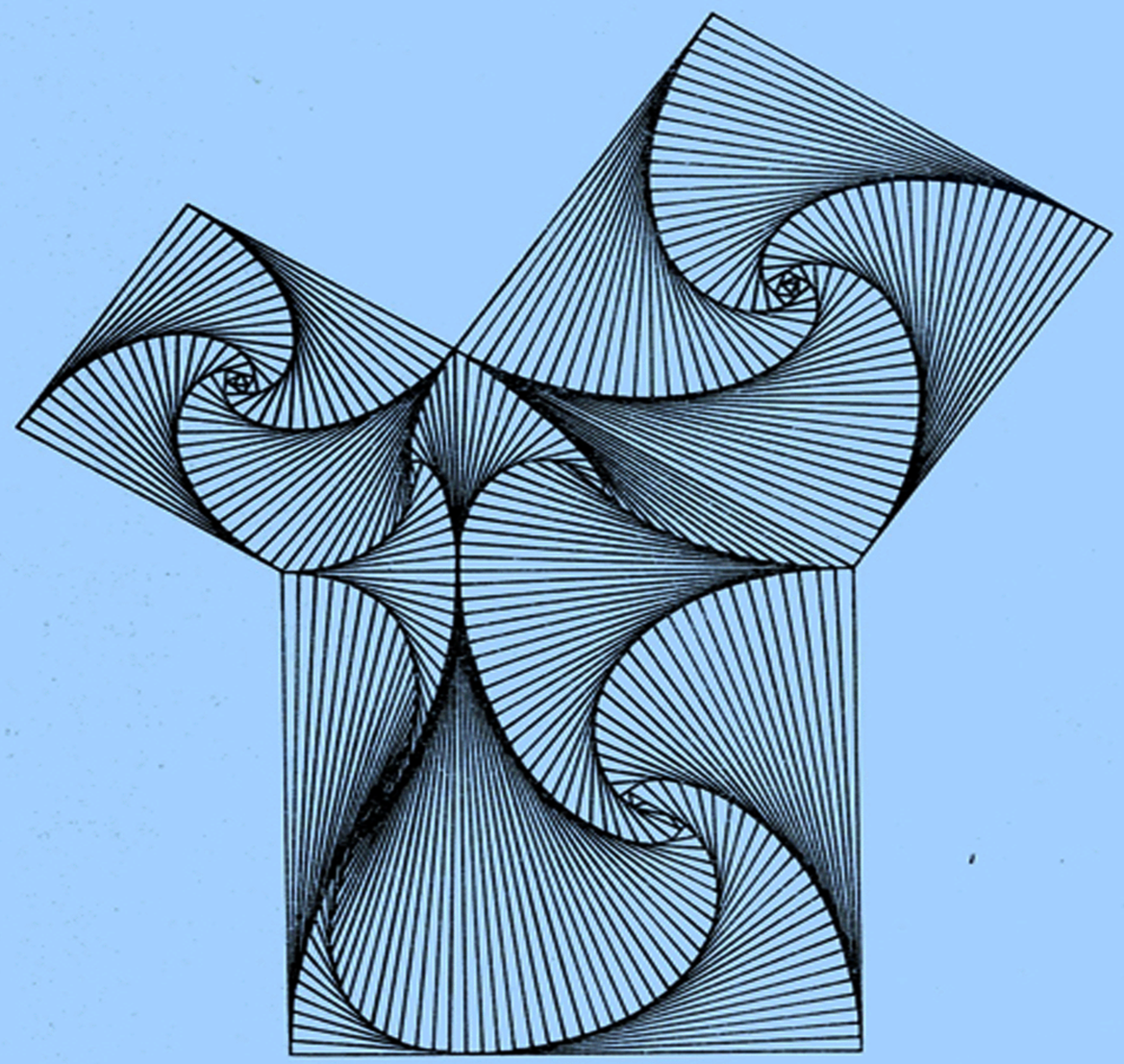

PICTOCODE 2

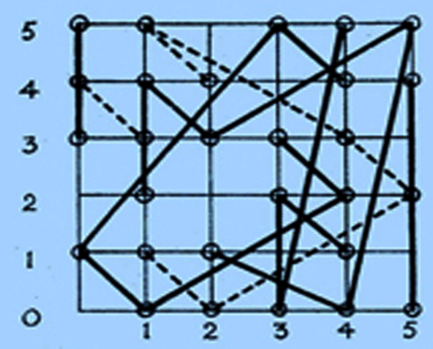

fig. i

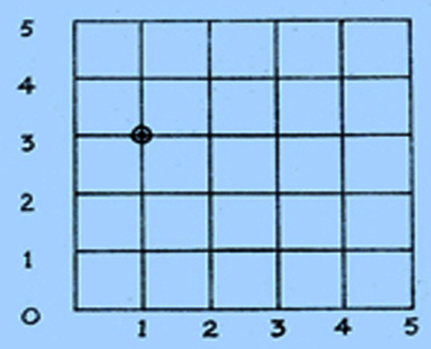

"Pictocodes" in issue 80 showed how a picture could be encoded or decoded by matrix multiplication and modulo arithmetic.

Decode fig. i by multiplying the ordered pair representing each point by the matrix $\begin{pmatrix} 4 & 3 \\ 1 & 1 \end{pmatrix}$ in Mod. 6 arithmetic. Plot the new points and join them in the order indicated by the lines connecting the points in fig. i.

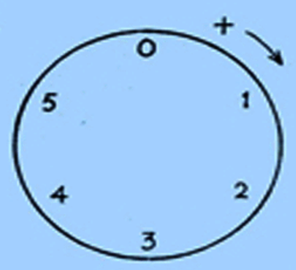

E.g. To transform (4, 5):

$$\begin{pmatrix} 4 & 3 \\ 1 & 1 \end{pmatrix} \begin{pmatrix} 4 \\ 5 \end{pmatrix} = \begin{pmatrix} 1 \\ 3 \end{pmatrix}$$

Now transform (3, 0), etc.

D.I.B.

DYNAMIC DUO DECIMAL

It is Friday night in Gotham City and Batman and Robin have been locked into the vaults of Gotham City Hall by the dastardly Riddler. The only way out is through the vault door which is opened by the computer upstairs in City Hall when the correct sequence of 72 digits is fed into it.

Inside the vault is a teletype link with the computer that Batman and Robin can use to open the door, if they can work out the combination in time before the evil Riddler reaches the basement and switches off the power supply.

The Riddler has left on top of the teletype a paper with the first 48 digits on it, leaving Batman and Robin to work out the rest.

1898	2912	3036
1279	2493	3617
4150	5274	6398
4831	5055	6279
....	....	....
....	....	....

continued from page 644

This is obviously a simple example so I have worked through example 2 and perhaps you can follow the steps taken. Try to work out why the numbers come in the right "places", i.e., units tens, etc., in the answer and see if you can use this method to multiply so that Aboul can see it hassan ali ben a waste of time!

Example 2.

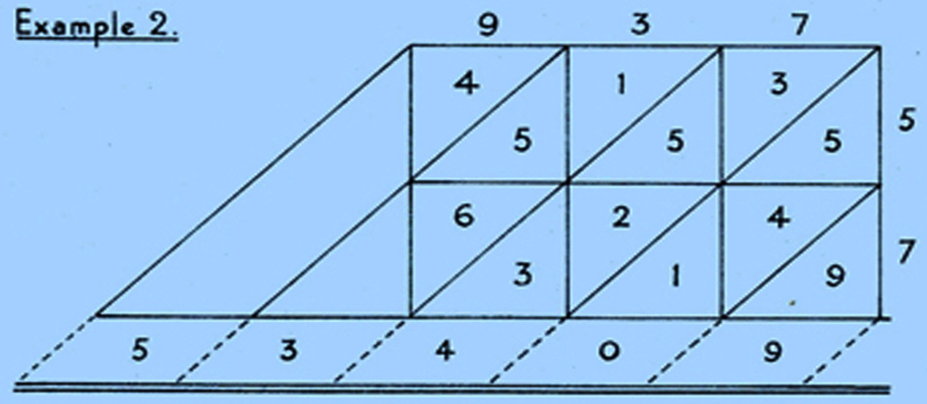

P.J.G.

SOLUTIONS TO PROBLEMS IN ISSUE No. 80

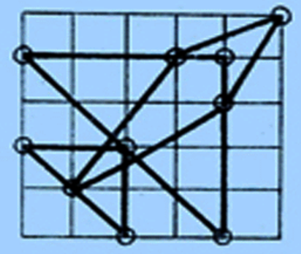

Solution to Pictocode Blue-print

TAXI

You should pay £1.

NUMBER MAGIC

The answer is always nine digits the same as the first multiplier because $9 \times 12345679 = 111111111$.

ONLY IN 632879

The solution is not unique but the title identifies the one we want. Only in winter $9532 + 1246 = 10778$.

NUMBER PATTERNS

Table 1 $c = a + b + 2$. Table 2 $c = (b \div 2\sqrt{a})^2$.

CUTIE'S PARTY

Cutie received 20 presents and there were 41 at the party. Did you forget Cutie?

A HANDSOME MESSAGE

PIE RULES OK? Each picture gave the position of the letter in the alphabet.

B.A.

BUSINESS SIGNS

The sign on the left could be used for advertising a Chinese Take Away. The editor would be happy to receive similar signs for other businesses. The designs need not be drawn accurately nor with skill as "Shuttl" will tidy up your ideas. Book tokens will be awarded to those sending ideas that are used.

THANKS FOR THE MEMORY

George Bedder (1806-1878) is renowned as a calculating prodigy. In 1816 when giving a performance of his feats a number was read to him backwards. He immediately gave it in its normal form. An hour later he repeated the number—

2,563,721,987,653,461,598,746,231,905,607,541,128,975,231

How good is yours?

R.H.C.

SWOP SHOP

Two donkeys were walking along with measures of corn. One said to the other: "If you gave me one measure I should be carrying twice as much as you. If, on the other hand, I gave you one, we should have equal burdens".

How many measures was each carrying? (Single figure numbers.)

R.H.C.

LADY LUCK

Each of the two hands of the "Lucky Clock" spins independently of the other and stops on any one of the twelve number-scores.

What is the probability that the sum of the two scores is 24?

What is the probability that the product of the two scores is 24?

D.I.B.

Batman immediately works out the next twelve digits, which are—

7412 8356 9650

but then he gets stuck.

"Holy Hotcakes, Batman!" says Robin, "how do you do it?"

"That's easy Robin, the first and third rows follow a pattern. The first group of four digits begins with 1, the second with 2, and so on. I add 7 to get the second digit of each group (ignoring tens if there are any). I get the next digit by adding the first two together and ignoring tens and I get the last digit by doubling the one before and ignoring tens."

"Jumping Jacktraps, Batman, the other rows follow a pattern too", says Robin, punching in the last twelve digits so that the vault doors spring open seconds before the power fails.

What was the rule linking the 2nd, 4th and 6th rows, and what were the missing digits?

A.M.A.

A SEASONAL PROBLEM

Underline any number in the matrix below. Then underline another number not in the same row nor in the same column. Continue until you have underlined five numbers with not more than one in any column or in any row. Now add the numbers together.

775	506	602	543	501
612	343	439	380	338
432	153	249	190	148
728	459	555	496	454
388	119	215	156	114

Happy ANSWER to you.

C.V.G.

FIND YOUR OWN LEVEL

Two cylinders, one having twice the diameter of the other, have their bases joined by a pipe with a tap in it. If the smaller cylinder is 75 cms. high and is filled with water, what will be the common height of the water when the tap is opened?

R.H.C.

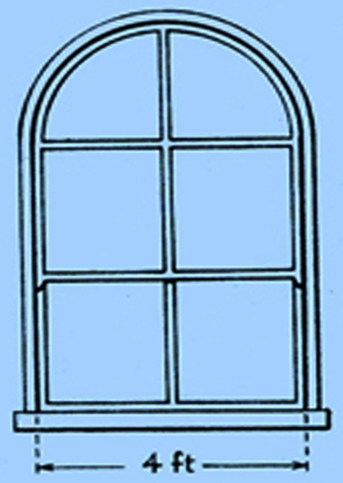

WINDOW DRESSING

A sash window with a half-round top is four feet wide. If the top sash is lowered one foot what is the area of the "moon"-shaped opening left at the top?

R.M.S.

Two proofs of the famous theorem for amusement—and senior pupils! only. Both require a knowledge of similar triangles and their area.

1. "Intermediate" standard

Take any rectangle of paper (thin, flexible paper works best), and mark the mid-points of the shorter sides. See fig. 1a).

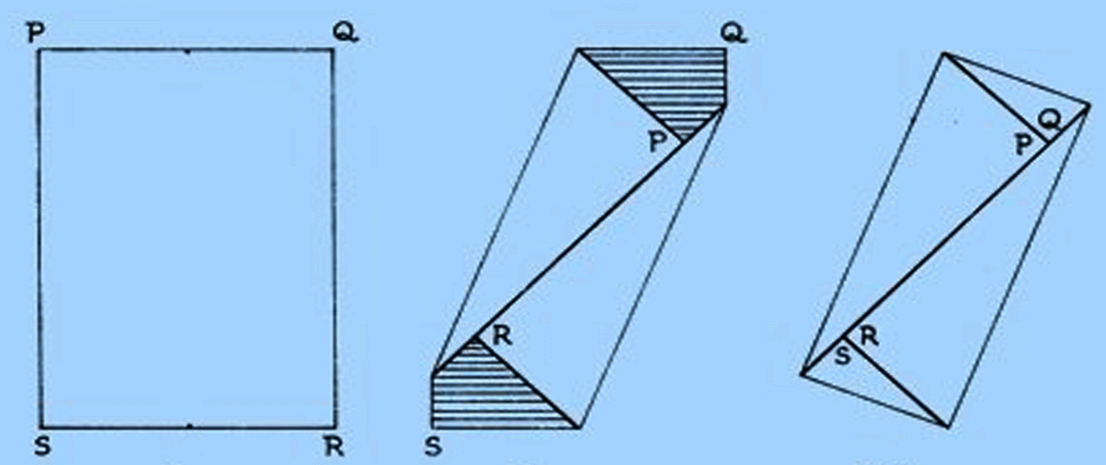

Fold over the corners P and R *at the same time*, so that the folds pass through the mid-points you have marked, and the longer edges come together. This isn't very easy and you may have to do some adjusting—it may help if you noted that the "unfolded" portions (shaded in fig. 1b) are kites. Finally turn over the corners Q and S to produce a rectangle as in fig. 1c). This rectangle is made up of four triangles. If the larger triangles have sides a, b and h in order of sides, it is not difficult to show that the smaller triangles have sides a^2/b, a and ah/b.

The area of the rectangle can now be calculated either as "length times breadth" or as four triangles.

$$h\times\frac{ah}{b}=2\times\frac{ab}{2}+2\times\frac{a^2}{b}\cdot\frac{a}{2}$$

Multiplying by b and dividing by a, $h^2=b^2+a^2$.

2. "Advanced" level

An interesting construction for anyone, but to follow the working you need to know the sum of a geometric series:

$$1+r+r^2+r^3+\ldots\ldots\ldots=\frac{1}{1-r}$$

Draw any right-angled triangle in which the sides about the right angle are unequal (fig. 2a). From the "sharp end" measure off a distance, up the incline, equal to a. On the remainder of the incline, draw a triangle with the same angles as the original—see fig. 2b). Repeat the process to the limit of the accuracy of your drawing instruments, or the limit of your patience—see fig. 2c).

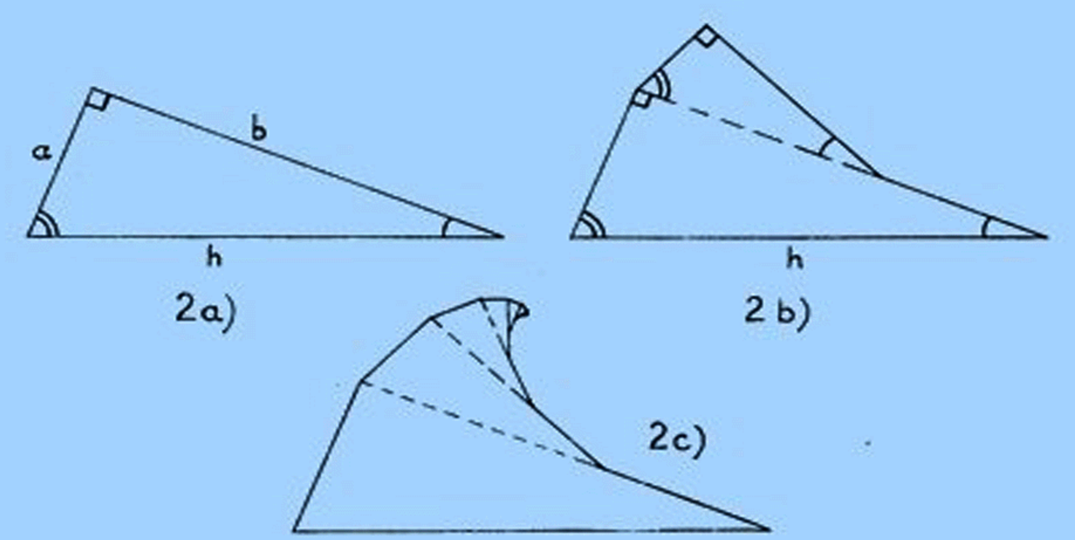

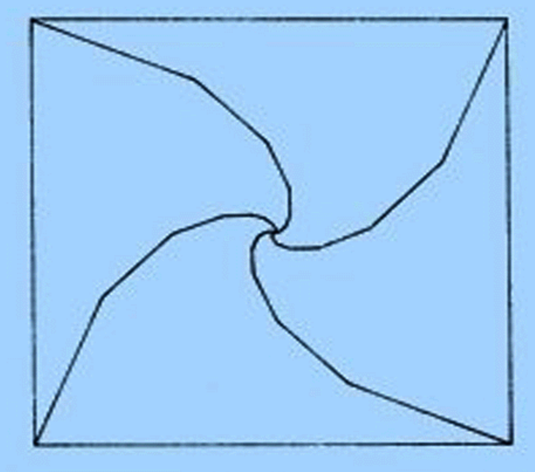

fig. 3

If it were possible to continue the process indefinitely, the resulting "infinagon" would tesselate into a square—see fig. 3.

The ratio between the lengths of successive triangles is h:(b−a), so the ratio of the area of any triangle to the triangle before is $(b-a)^2 : h^2$.

To save space we will write $\frac{(b-a)^2}{h^2}$ as r.

The area of the square can now be regarded as either h^2 or as the area of four "infinagons".

$$h^2=4(\tfrac{1}{2}ab+\tfrac{1}{2}abr+\tfrac{1}{2}abr^2+\tfrac{1}{2}abr^3+\ldots\ldots)$$
$$h^2=2ab(1+r+r^2+r^3+\ldots\ldots)$$
$$h^2=\frac{2ab}{1-r}$$
$$(1-r)\,h^2=2ab$$
$$h^2=2ab+h^2r$$
$$h^2=1ab+(b-a)^2$$
$$h^2=2ab+b^2-2ab+a^2$$
$$h^2=a^2+b^2 \quad \text{(surprise, surprise!)}$$

It *is* nice to know that Mathematics is consistent, isn't it!

E.G.